Programmable voltage regulating method for high voltage DC power supply based on digital potentiometer and linear photoelectric coupling

CHEN Xin[1], MI Yan[1], LI Cheng-xiang[1], YAO Chen-guo[1], DU Lin[1], WANG Shi-shou[2]
[1]State Key Laboratory of Power Transmission Equipment & System Security and New Technology, Chongqing University, Chongqing 400044, China
[2]power supply limited liability company, Pengshui county, Chongqing 409600, china

Abstract- **In order to solve the disadvantages caused by mechanical slide rheostat that they were big errors and low precision, a novel voltage regulation method for high voltage DC power supply was introduced. The key of this method were digital potentiometer Maxim 5455 and linear photoelectric coupling LOC110, and application programs were compiled using Visual Basic which was graphical compiling language, furthermore the communication between exterior and computer was carried out by ICP7044D module, in consequence the output value of high voltage DC power supply could be regulated with computer. The measured results showed that this method could accurately, conveniently and rapidly regulate the output value of high voltage DC power supply.**

Key words- **high voltage DC power supply; programmable voltage regulating; digital potentiometer; linear photoelectric coupling**

I. INTRODUCTION

Nowadays high voltage DC power supply was used in many fields, such as: material modification, metal smelting, environmental protection, high power laser, medical device and so on.[1,2] Traditional high power supply, whose voltage regulating method was manually mechanical operation, could not adapt to the development of industrial automation, therefore it was necessary to find a intelligent adjusting method for voltage regulating of high voltage DC power supply. In this paper, a novel programmable voltage regulating method for high voltage DC power supply was introduced. The key of this method were digital potentiometer Maxim 5455 and linear photoelectric coupling LOC110, and controlling program was compiled with Visual Basic, moreover the computer communicated with the external signal by ICP7044D, thus the intelligent control of high voltage DC power supply was implemented. And the measured results showed that this method could accurately, conveniently and rapidly regulate the output value of high voltage DC power supply.

II. GENERAL SCHEME

A. Principle block diagram

As shown in Fig.1, this system combined the hardware with the software, and generate 0～5V DC voltage by controlling the resistance value of digital potentiometer on the man-machine dialog interface, further more the DC voltage with linear photoelectric coupling isolation could be used for voltage regulating of high voltage DC power supply.

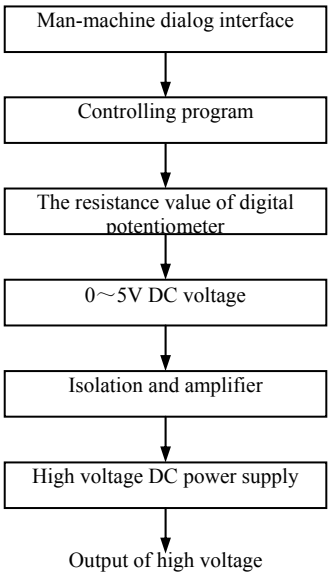

Fig.1 The Principle block diagram of whole system

B. Brief introduction of each part

1. Visual Basic

Visual Basic was used to compile the man-machine conversation window in this system. As well known, VB was one of the most widely used compiling languages and one of the most efficiently compiling languages. VB had visual develop graphical user interface and usually could not compile a great deal of codes to describe the appearance and position of interface elements, furthermore just dragged the necessary controls to the correspond positions on the screen[4]. In this paper we made use of Visual Basic 6.0 version.

2. digital potentiometer

Digital potentiometer also was named digital control programmable potential. The digital rheostat was one kind skids the end position new component with the digital signal control potentiometer, by the digital signal control adjustment, it had the merit which was unable in the automatic control system aspect mechanical potentiometer to realize. The digital rheostat essentially was a system which consist of control

interface, memory and resistance, and it was programmed through software and control interface. By digital technology the functions of mechanical potentiometer were implemented, moreover its material was semiconductor and its interior was integrated circuit. Its communication way was the serial communication which included triggering type, I^2C bus type and SPI interface type. In this article Maxim 5455 chip was used, which was yielded by MAXIM corporation and was edging triggering type[5]. The MAX5455 had two 3-terminal potentiometers which operated from a +2.7V to +5.5V single-supply voltage and use an ultra-low supply current of 0.1μA. Its resistance Value was 100KΩ, and it consisted of two fixed resistors each with 256 digitally-controlled wiper contacts. The convenient power-on reset (POR) set the wiper to midscale position at power-up and the easy-to-use up/down interface allowed glitchless switching between resistor taps. It was guaranteed over the extended–industrial temperature range (-40°C to +85°C). Its simplified functional diagram was shown in Fig.2.

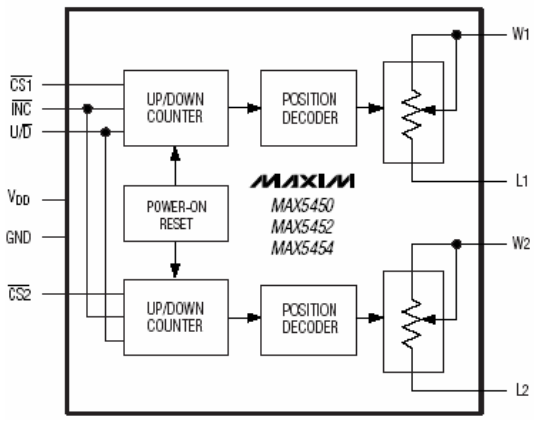

Fig.2 MAX5455 simplified functional diagram

3. photoelectric coupling for isolation amplifying

Isolation amplifier could greatly restrain common mode interference and availably block electric connection between scene and data acquisition system, but did not cut off the signal transmission between them. Electric isolation was very necessary in communications, industry, medical equipments, power supply and testing devices. Traditionally the isolation was implemented by transformers and photoelectric coupled devices, and transformers were applied for AC signals, but photoelectric coupled devices were used for DC signals.

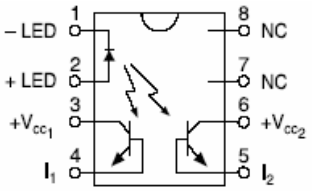

Fig.3 The pin configuration of LOC110

The LOC Series (LOC110, LOC111 and LOC112 with one optocoupler per package, and LOC210 and LOC211P with two per package) are linear optocouplers designed to be used in applications where galvanic isolation is required for AC and DC signal coupling and linearity from input to output must be accurately preserved. The device consists of an infra-red LED optically coupled with two phototransistors. One phototransistor is typically used in a servo feedback mechanism to control the LED drive current which has the effect of compensating for the LED's non-linear time and temperature characteristics. The other output phototransistor is used to provide the galvanic isolation between the input and output circuit. LOC110 could both couple digital and analog signals, and had many features such as: Wide Bandwidth (>200kHz), high gain stability, low power consumption and 0.01% servo linearity. The pin configuration of LOC110 was shown as Fig.3.

III. HARDWARE

A. I/O module

In this article, I/O module ICP7044D made from ICP DAS Co,Ltd communicated the data. Fig.4 was its internal structure. It was 4-channel Isolation Digital Signal Input/8-channel Isolation OC Output module, and its operating voltage was +10～+30VDC, moreover its OC voltage and maxim output current respectively were 30V and 375mA.

According to Fig.4, and the connecting mode was as follows: +Vs terminal and GND terminal respectively connected +15VDC and GND1; by RS485 interface converter data+ and data- terminals accessed into computer; IN.COM, Ext.PWR and OUT.COM terminals respectively +5V, +15VDC and GND1; the output terminals could connected +15VDC through pull-up resistances whose value all were 1K.

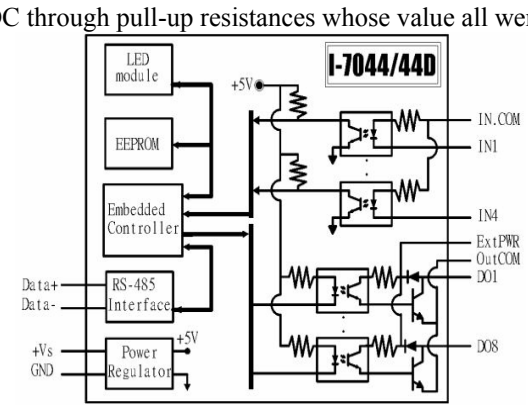

Fig.4 ICP7044D internal structure diagram

B. digital potentiometer

By Visual Basic 6.0 compiling program for the three-controlling terminals of Maxim5455 chip to change the number of digital potentiometer output value of size (0-100 k Ω), the three-controlling terminals respectively were $\overline{U/D}$、$\overline{INC}$ and $\overline{CS}$ terminals[6]. $\overline{U/D}$: Up/Down Control Input. With U/D low, high-to-low INC transition decrements wiper position. With U/D high, a high-to-low INC transition increments wiper position. $\overline{INC}$: Wiper Increment Control Input. With CS1 low, a high-to-low transition increments (U/D high) or decrements (U/D low) wiper position W1. This

applies similarly for CS2 and W2. $\overline{CS}$: Chip-Select Input. Drive low to change wiper position W1through INC and U/D.

C. *isolating amplifier circuit*

Shown as Fig.5, before the signals of W1 terminal accessed into the isolation circuit, they passed by the voltage following circuit; in the article operational amplifier was OP07cp, it was a high input impedance, high precision, low noise and low power dissipation operational amplifier. Its features were as follows: Wide Supply Voltage Range ±3 V to ±18 V; at normal temperature the maxim input offset voltage 150μV, the maxim input offset current 6nA, the maxim input bias current ±7nA, the minimal common-mode input voltage ±13V, the minimal common-mode rejection ratio 100dB, the minimal input impedance 8MΩ.

There were two operating mode using LOC110 for isolating amplifier circuit: Photoconductive Mode and Photovoltaic Mode; in this paper Photovoltaic Mode was applied. Using the LOC product in the photovoltaic mode achieves the best linearity, lowest noise and drift performance[3]. It is possible to achieve up to 14-bit D/A linearity in this mode. The tradeoff with this topology is that bandwidth is limited to about 40kHz. The main features of LOC110 were the following: servo gain K_1, Defined as the ratio of the servo photocurrent I1 to the LED forward current IF: K1 = I1/IF. For the LOC110, K1 is typically 0.007 for an IF of 10mA and a VCC of 15V. Forward Gain - K2 Defined as the ratio of the output photocurrent to the LED forward current IF: K2 = I2/IF. K2 is typically 0.007 for an IF of 10mA and VCC of 15V. Transfer Gain - K3 Defined as the ratio of K2 to K1: K3 = K2/K1.

In the photovoltaic mode, the LOC phototransistors act as current generators. Since all photogenerators display some voltage dependence on linearity, maintaining a 0V bias on the phototransistor eliminates this problem and improves linearity. If the phototransistor is connected across a small resistance, the output current is linear with increases in incident LED flux. To accomplish this, the phototransistors are connected across the op amp inputs. As V_i increases, the current through the LED increases and so does the optical flux. The LED flux is incident on the servo phototransistor which starts current I_1 to flow from the op amp inverting input through the phototransistor. This servo photocurrent is linearly proportional relation.

$$V_{IN} = I_1 \times R_{4_4} = I_F \times K_1 \times R_{4_4} \qquad (1)$$

The flux from the LED is also incident on the output phototransistor which causes a current I_2 to flow from the inverting input of the output op amp through the phototransistor. As I_2 is pulled from the inverting node, the output of the amplifier begins to go high until a current equal in magnitude to I_2 is injected into the inverting node of the amplifier. Since this current I_3 flows through R_{4_6}, an output voltage is developed such that

$$V_{OUT} = I_2 \times R_{4_6} = I_F \times K_2 \times R_{4_6} \qquad (2)$$

In this paper, R_{4_4} and R_{4_6} both were 33kΩ, K_1 and K_2 both were the minimal value 0.004. According to equation (1) and (2), A which was the gain of isolating amplifier circuit could be shown as:

$$A = \frac{V_{OUT}}{V_{IN}} = \frac{I_F \times K_2 \times R_{4_6}}{I_F \times K_1 \times R_{4_4}} = \frac{K_2 \times R_{4_6}}{K_1 \times R_{4_4}} \qquad (3)$$

Substituting the value of R_{4_4}、R_{4_6}、K_1 and K_2 into equation (3) the gain could be obtained, A=1.

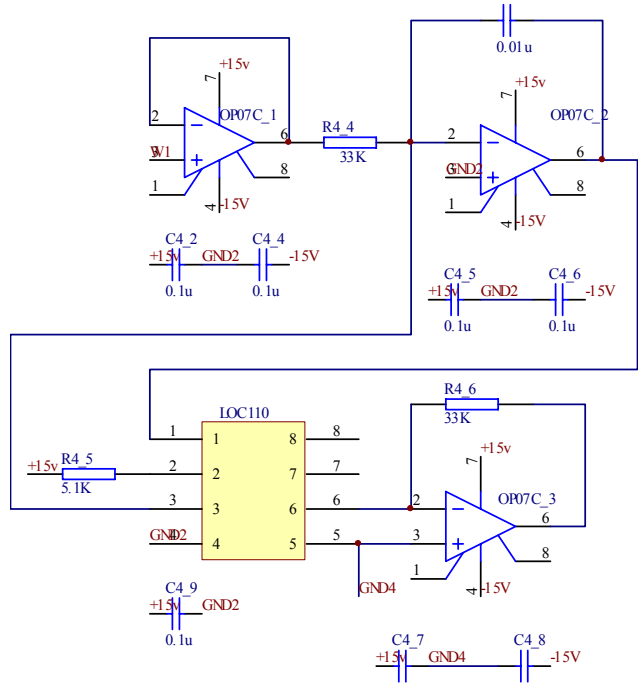

Fig.5 the isolating amplifier circuit of controlling signals for high power supply

D. *High voltage power supply*

In the paper the high voltage power supply, whose output voltage was 0～15kV and output current was 20mA, was made in TianJin Liao Corporation. There was voltage controlling mode in the interior of power supply, that was 0～5V from the exterior controlled the out value of power supply range of 0～15kV. Because the exterior controlling signal and output high voltage had common ground, the isolating amplifier circuit was applied for isolation between low voltage ground on the printed circuit board and high voltage ground for avoiding the influence on the low voltage.

IV. THE FLOW CHART OF SOFTWARE

As shown in Fig.6, when starting the program, firstly initialization that was adjusting the digital potentiometer from middle value (50KΩ) to the minimal value (0Ω), then presetting the voltage value and the output voltage of power supply starting to regulating voltage, after finishing the voltage regulation we could use the output voltage for experiments. When ending the high voltage experiments, the program of reducing voltage was operated. Since fulfilling the program, the power supply was turn off.

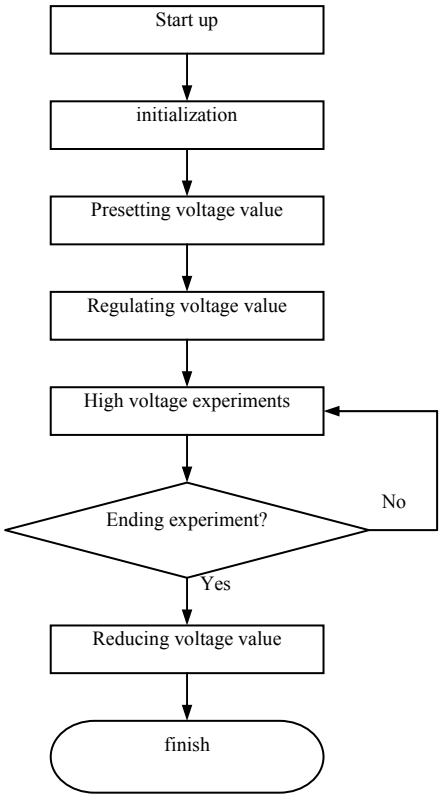

Fig.6 the flow chart of software

Table.1 the measured datas in the no-load condition (unit: kV)

Presetting value	0	1	3	5	7	9	11	13	15
U_1	0.01	0.96	2.98	4.99	7.10	9.10	11.26	13.27	15.03
U_2	0.01	0.96	2.97	4.98	7.06	9.08	11.23	13.28	14.99
U_3	0.02	0.98	2.98	4.99	7.08	9.10	11.24	13.27	15.01
U_a	0.01	0.97	2.98	4.99	7.08	9.09	11.24	13.27	15.01

Table.2 the measured datas in the load condition (unit: kV)

Presetting value	0	1	3	5	7	9	11	13	15
U_1	0.02	0.98	2.98	5.10	6.95	9.10	11.24	13.28	15.03
U_2	0.01	0.99	2.98	5.06	7.01	9.07	11.21	13.25	15.01
U_3	0.01	0.99	2.99	5.12	7.03	9.05	11.20	13.26	15.00
U_a	0.01	0.99	2.98	5.09	7.00	9.07	11.22	13.26	15.01

V. SYSTEM TEST

For the sake of testing the performance of whole system, we did the experiments in the laboratory under no-load and with load conditions. The load was composed of four parallel pure resistances whose resistance value all were 5MΩ and power all were 100W, therefore the new resistance value was 1.25 MΩ and the new power was 400W. Under every condition we did three repeated tests and respectively gained measured values U_1, U_2 and U_3, lastly mean U_a which was reserved two bits decimals was obtained and the results were shown as table 1 and table 2. In the table, the preset value was the setting voltage value which was inputted to man-machine dialog interface, and the measured values U_1, U_2 and U_3 were measured on the output terminal of high power supply by P6015A hv probe and DPO4054 oscillograph (USA Tektronix Corporation).

After analyzing the above results, it was found that when the voltage value was higher, the error was bigger. Maxim 5455 chip had 256-tap positions and the resistance value of each tap was not entirely equal, moreover it was higher tap and bigger deviations but it was assumed that the resistance value of each tap was equal, therefore it was that higher value of preset voltage induced greater error between fact output and preset value. From the table 1 and table 2 we could obtain the maxim error η:

$$\eta = \frac{11.24 - 11}{11} \times 100\% \approx 2.18\% \qquad (5)$$

VI. RESULTS

The Programmable voltage regulating method for high voltage DC power supply in this paper was introduced, and its core was digital potentiometer Maxim 5455 and linear optical coupling LOC110, and application programs were compiled using Visual Basic which was graphical compiling language, furthermore the communication between exterior and computer was carried out by ICP7044D module, lastly controlling the output value by computer was successfully achieved. The measured results showed that this method could accurately, conveniently and rapidly regulate the output value of high voltage DC power supply, and the disadvantages caused by mechanical slide rheostat that they were big errors and low precision was solved.

REFERENCES

[1]. LIJie, GONGChuan. "Investigation of the HF/HV Power Supply". *Journal Of Hebei University(Natural Science Edition)*, 2007, 27(10): 157～160

[2]. WANGLixin. "A Digital Potentiometer MCP42010- based Programmable High Voltage Power Supply" .*Microcomputer Information*, 2007, 23(2):204～205

[3]. LIShujin, LINLin. "The principle and applications of Linear Opto-Coupler Loc110". *Optical Device*, 2002, 12: 44～46

[4]. WANGHuaibin. "Program Design for Visual Basic". *BeiJing China Machine Press*, 2008

[5]. SHAZhanyou. "The design principle and application of digital potentiometer". *BeiJing: China Machine Press*, 2007

[6]. LIUYuansheng, LIZheying. "The analysis on application characteristics of digital potentiometer" . *International Electronic Elements*, 2002, 7: 14～18